BEEZER

INSTALLING CIRCUIT BOARDS

1. Remove old circuit boards, save all mounting brackets.
2. Relocate upper brackets to fit larger boards.
3. Secure 'A' and 'B' boards to side of game.
4. Connect 'CONVERTER' board to 'A/B' boards as shown in diagram below.
5. Connect old main harness to 'CONVERTER' board as old set of boards you removed.
6. Assemble control panel and connect to 'CONVERTER' board at connector shown in diagram.

NOTE !!

The potentiometer on the 'CONVERTER' board is VOLTAGE ADJUSTMENT. PRE-SET AT FACTORY, TECHNICIAN ADJUST ONLY!!!
The potentiometer on 'B' board at D11 is VOLUME control

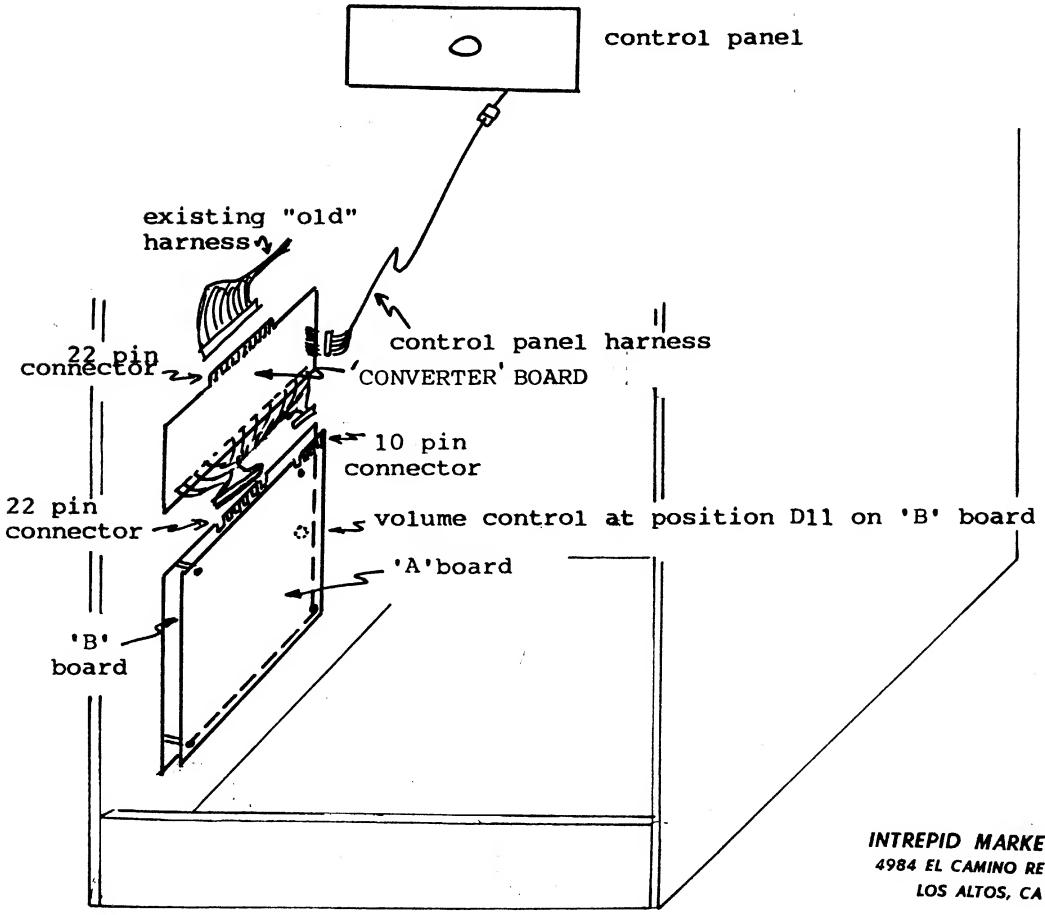

INTREPID MARKETING, INC.
4984 EL CAMINO REAL, STE. 217
LOS ALTOS, CA 94022

BEEZER

B. BOARD						A. BOARD					
SOLDERING SIDE					COMPONENT SIDE	SOLDERING SIDE					COMPONENT SIDE
+5V	(B1)	22	Z	(A1)	+5V	GND	(1)	10	L	(1)	GND
	(B2)	21	Y	(A2)		BLUE	(2)	9	K	(2)	
+12V	(B3)	20	X	(A3)		GREEN	(3)	8	J	(3)	
	(B4)	19	W	(A4)	GND	RED	(4)	7	H	(4)	
	(B5)	18	V	(A5)			(5)	6	F	(5)	
	(B6)	17	U	(A6)		SYNC	(6)	5	E	(6)	
-5V	(B7)	16	T	(A7)	-5V		(7)	4	D	(7)	
+12V	(B8)	15	S	(A8)	+12V	+12V	(8)	3	C	(8)	+12V
SPEAKER (+)	(B9)	14	R	(A9)		-5V	(9)	2	B	(9)	-5V
	(B10)	13	P	(A10)	SPEAKER (-)	+5V	(10)	1	A	(10)	+5V
GND	(B11)	12	N	(A11)	GND						
	(B12)	11	M	(A12)	-5V						
	(B13)	10	L	(A13)							
PLAY 1 (DO TEST)	(B14)	9	K	(A14)							
PLAY 2 (SELECT TEST)	(B15)	8	J	(A15)							
COIN	(B16)	7	H	(A16)							
SLAM	(B17)	6	F	(A17)							
Y_3	(B18)	5	E	(A18)	X_3						
Y_2	(B19)	4	D	(A19)	X_2						
Y_1	(B20)	3	C	(A20)	X_1						
Y_0	(B21)	2	B	(A21)	X_0						
GND	(B22)	1	A	(A22)	GND						

NITE:

1. (A4) is the audio enable ground, should connect to (A11) or (A22).

2. Board A., board B. & mini track ball board's ground should connect together.

3. Mini track ball board's X_0- X_3, Y_0- Y_3 connect to board B.'s X_0- X_3, Y_0- Y_3.

4. Mini track ball board's X_A,X_B,Y_A,Y_B should connect to track ball, X_A, X_B are horezontal control, Y_A, Y_B are vertical control.

5. The audio amplifier is bridge output. Do not connect speaker to ground.

6. Audio level potentiometer is at position D11.

GALAXIAN (TO BEEZER)

GND	22	Z	GND
GND	21	Y	GND
	20	X	AC 12V
	19	W	AC 12V
AUDIO (+)	18	V	AUDIO (-)
SYNC	17	U	BLUE
GREEN	16	T	RED
GND	15	S	GND
	14	R	
	13	P	
	12	N	
	11	M	
	10	L	
SERVICE SW.	9	K	
	8	J	COIN SW.
JUMPER TOGETHER	7	H	COIN METER (-)
	6	F	
	5	E	COIN METER (+) (12V)
	4	D	AC 7V
	3	C	AC 7V
GND	2	B	GND
GND	1	A	GND

CONVERT BOARD TO CONTROL PANEL

1.	GROUND (BLACK)	TO MINI TRACK BALL BLACK WIRE.
2.	X_A (GREEN)	TO WICO TRACK BALL GREEN WIRE.
3.	X_B (YELLOW)	TO WICO TRACK BALL YELLOW WIRE.
4.	Y_A (PURPLE)	TO WICO TRACK BALL PURPLE WIRE.
5.	Y_B (BLUE)	TO WICO TRACK BALL BULE WIRE.
6.	GROUND (BLACK)	TO 1P, 2P SWITCH COMMON.
7.	1 PLAY (WHITE)	TO 1P SWITCH.
8.	2 PLAY (BROWN)	TO 2P SWITCH.
9.	+5V OUT (RED)	TO WICO TRACK BALL RED WIRE.
10.	+5V OUT (RED)	TO WICO TRACK BALL RED WIRE.
11.	SPARE (GRAY)	NOT USED.
12.	SPARE (ORANGE)	NOT USED.

TRACKBALL INTERFACE & COUNTER DRIVER.

SOLDERING SIDE	B	A	COMPONENT SIDE
+ 5V	10	L	+ 5V
GND	9	K	GND
COIN METER	8	J	COIN OUT (CONNECT TO B BOARD B16)
(CONNECT TO B BOARD B18) Y_3	7	H	X_3 (CONNECT TO B BOARD A18)
(CONNECT TO B BOARD B19) Y_2	6	F	X_2 (CONNECT TO B BOARD A19)
(CONNECT TO B BOARD B20) Y_1	5	E	X_1 (CONNECT TO B BOARD A20)
(CONNECT TO B BOARD B21) Y_0	4	D	X_0 (CONNECT TO B BOARD A21)
SERVICE	3	C	COIN IN
DOWN (FROM TRACKBALL) Y_B	2	B	X_B (FROM TRACKBALL) RIGHT
UP (FROM TRACKBALL) Y_A	1	A	X_A (FROM TRACKBALL) LEFT

* Voltage control potentiometer is preset-do not adjust!

ADJUSTMENT SWITCHES

A SET OF DIP SWITCHES ARE LOCATED ON THE GAME LOGIC BOARD TO ADJUST FOR COINS.

* NOTE: MAKE SURE POWER IS OFF BEFORE MAKING THESE ADJUSTMENTS.

SWITCH SETTING:

SWITCH B:

	1	2	3	4	5	6	7	8
1 COIN 1 CREDIT	OFF	OFF						
2 COIN 1 CREDIT	ON	OFF						
FREE PLAY	ON	ON						
3 BEEZER START			OFF					
4 BEEZER START			ON					
ATTRACT MODE SOUND ON				OFF				
ATTRACT MODE SOUND OFF				ON				
NO BONUS					OFF	OFF		
BONUS AT 90,000 POINTS					ON	ON		
BONUS AT 60,000 POINTS					OFF	ON		
BONUS AT 30,000 POINTS					ON	OFF		
EASY							OFF	OFF
MEDIUM EASY							ON	OFF
HARD							ON	ON
MEDIUM HARD							OFF	ON

SWITCH A:

NOT USED

INSTRUCTION FOR TEST MODE:

(1) To enter test mode:
- (a) Power down
- (b) Turn on while holding down 1P / 2P start switches

(2) Now in test mode. If not, repeat (1)(a) and (1)(b).

(3) Test manuel on screen:
- (a) cycle to required item using 1P button
- (b) enter specific test using 2P button
- (c) cycle next test using 1P button
- (d) leave test by cycling to start or turn off/on.

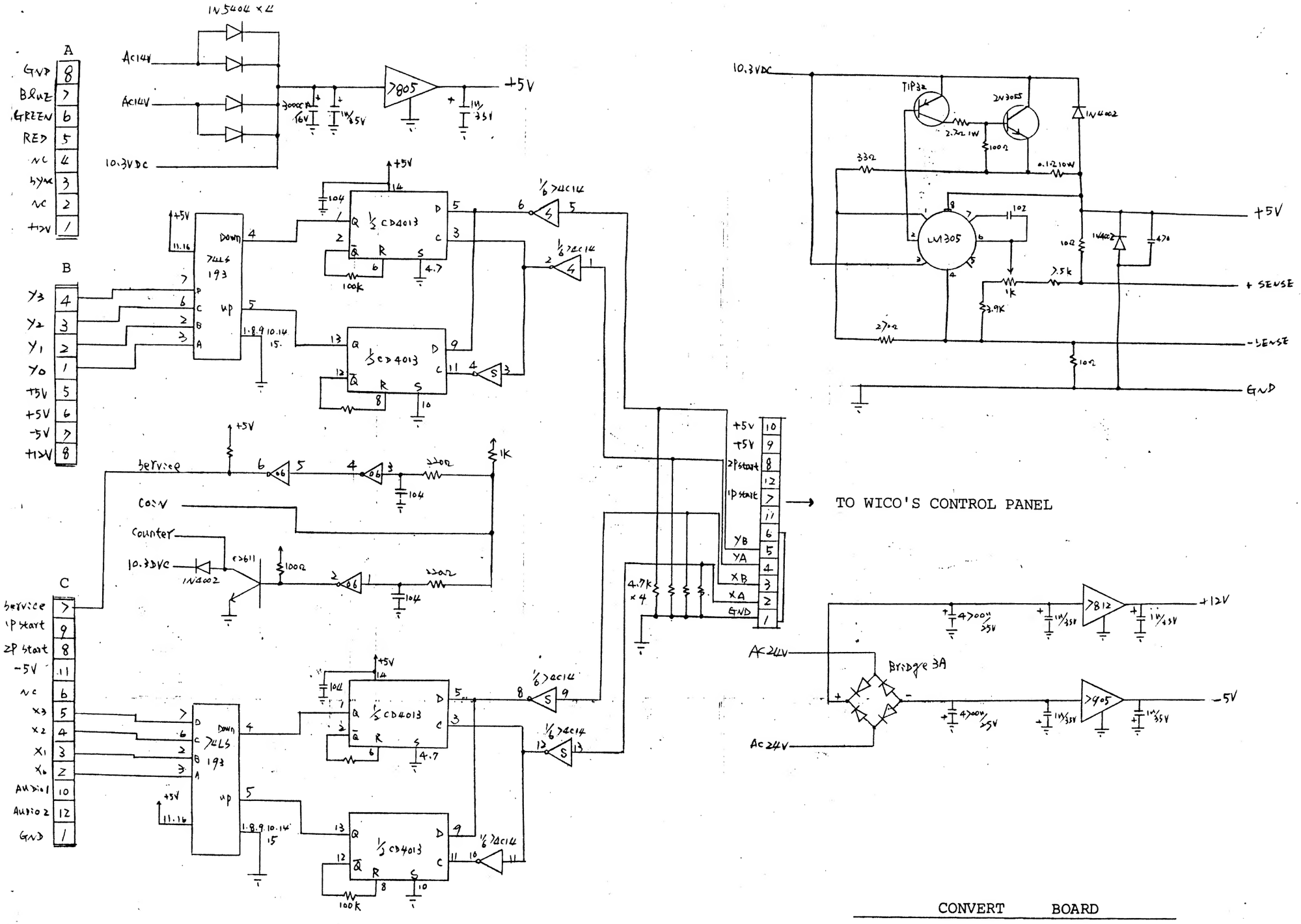
A
GND 8
BLUE 7
GREEN 6
RED 5
NC 4
SYNC 3
NC 2
+12V 1
B
Y3 4
Y2 3
Y1 2
Y0 1
+5V 5
+5V 6
-5V 7
+12V 8
C
service 7
1P start 9
2P start 8
-5V 11
NC 6
X3 5
X2 4
X1 3
X0 2
Audio1 10
Audio2 12
GND 1
1N5404 x4
AC14V
AC14V
10.3VDC
7805
+5V
74LS 193
CD4013
100K
4.7
service
coin
counter
10.3VDC
1N4002
E3611
100Ω
1K
4.7K x4
TO WICO'S CONTROL PANEL
+5V 10
+5V 9
2P start 8
1P start 7
YB 6
YA 5
XB 4
XA 3
GND 2
1 11
10.3VDC
TIP32
2N3055
1N4002
2.2Ω 1W
100Ω
33Ω
0.1Ω 10W
LM305
10Ω
470
3.5k
1k
3.9K
270Ω
+5V
+ SENSE
- SENSE
GND
AC24V
Bridge 3A
AC24V
7812
7905
+12V
-5V
CONVERT BOARD

RESET
S1
CR1
100K R1
10K R3
555 IC U20
B5 2N2907
100K R2
100uf C2
C1
WCHD
U14
RESET
+5
U1, U2, U3
1A, 1B, 1C
74LS367 <3>
ADDRESS BUS
50 pin header
J1
ADDRESS BUS
1A & 1-3
U13 LS86 2C
U13 LS04 2C
U13 LS04 2C
E
IRQ
FIRQ
RESET
RST
E
Q
IRQ
FIRQ
HALT
NMI
DMA
MRDY
BS
EXT
XTL
2B
U11
MC6809
R5 220
R4 1.5K
12MHZ
R6 220
R7 560
U19
Y1
HI-B
R8 ALL 10K
R9
R10 4.7K
R11 47K
+5
U1
74LS244
R/W
U17
74LS245
U7
1G
A15
BA
D7
D0
A0
A15A
A14A
A13A
A12A
A11A
A10A
A9A
A8A
A7A
A6A
A5A
A4A
A3A
A2A
A1A
A0A
256x4 ROM U5 9342 1E
256x4 ROM U4 9342 1D
U6 LS139 1F
74LS32
74LS08
U16
U17
U18
U15
U12
U13
U14
U19
U20
U21
U22
U23
U24
U25
U26
U27
U28
U29
U30
U31
U32
U33
U34
U35
U36
U37
U38
U39
U40
U41
U42
U43
U44
U45
U46
U47
U48
U49
U50
U51
U52
U53
U54
U55
U56
U57
U58

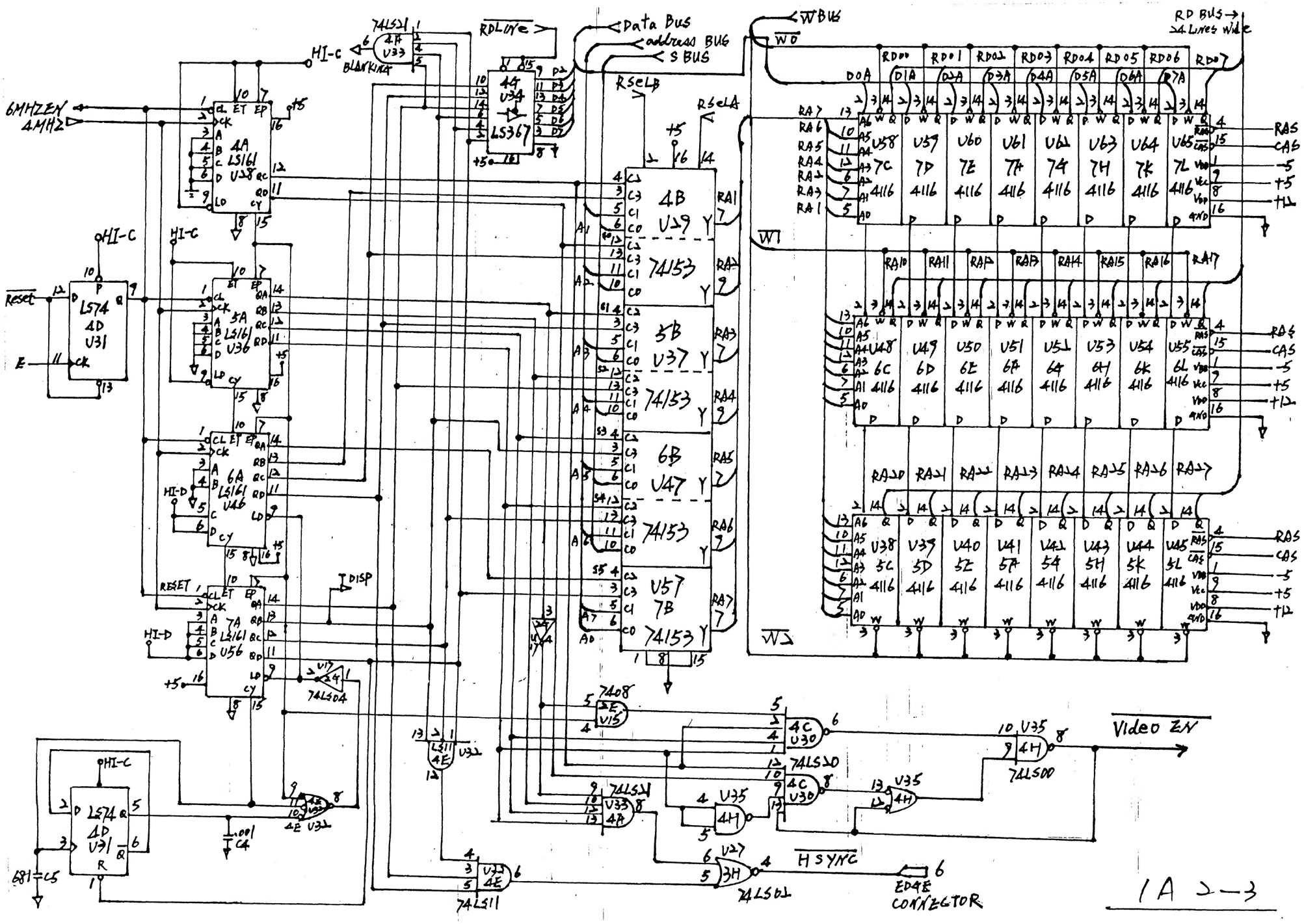

Data Bus
address BUS
S BUS
RD BUS
24 Lines Wide
RDLINE
BLANKING
6MHZEN
4MHZ
Reset
DISP
Video EN
H SYNC
ED4E CONNECTOR

1A 2-3

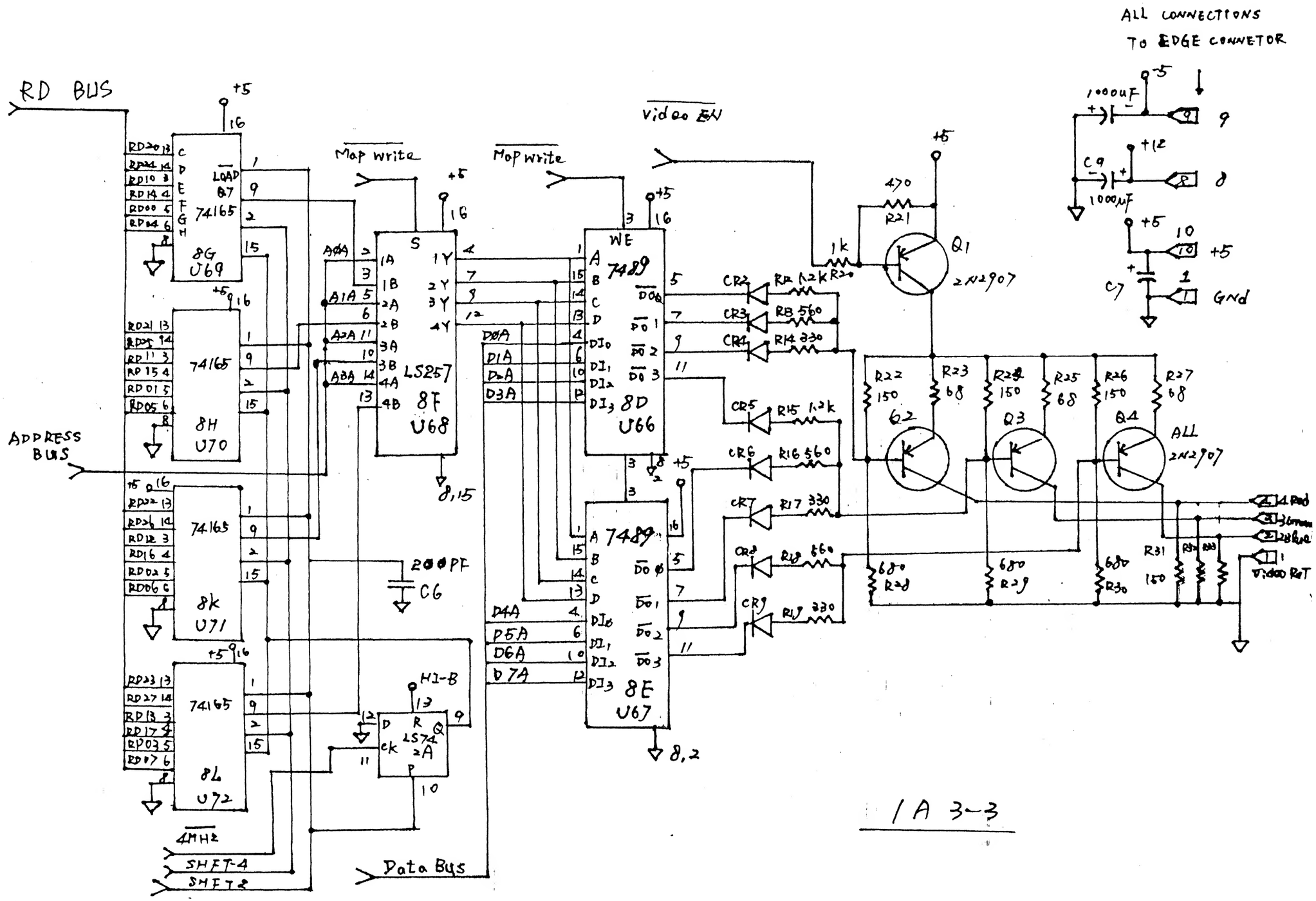
ALL CONNECTIONS
TO EDGE CONNETOR
RD BUS
ADDRESS BUS
Map write
Map write
Video EN
74165
8G
U69
74165
8H
U70
74165
8K
U71
74165
8L
U72
LS257
8F
U68
7489
8D
U66
7489
8E
U67
LS74
2A
HI-B
200PF
C6
4MHZ
SHFT-4
SHFT-2
Data Bus
Q1
2N2907
Q2
Q3
Q4
ALL
2N2907
1000uF
1000uF
C9
C7
GND
Video Ret
1A 3-3

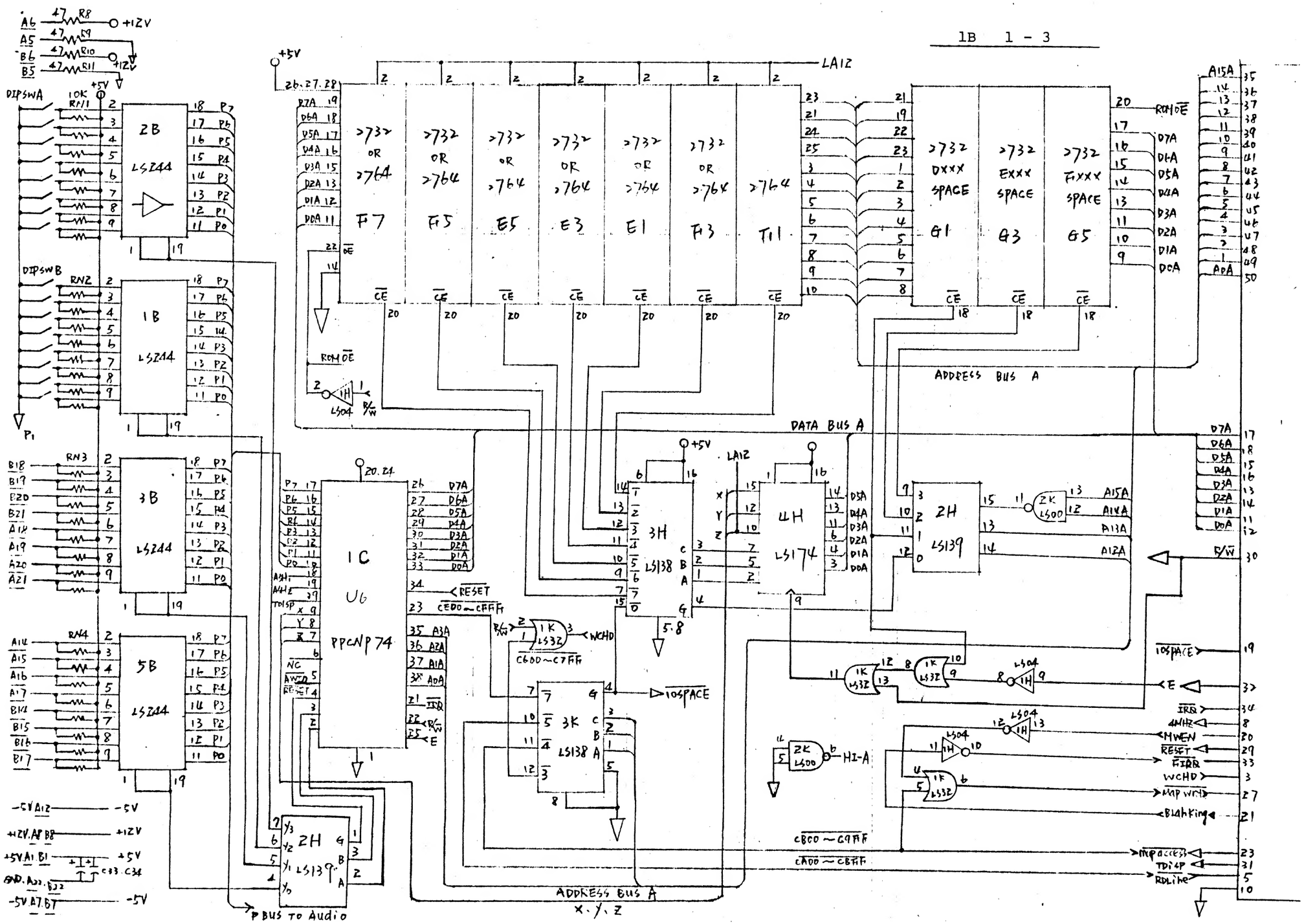

DIPSWA
DIPSWB
2B LS244
1B LS244
3B LS244
5B LS244
1C U6 PPCNP74
2H LS139
3H LS138
4H LS174
2H LS139
3K LS138
2732 OR 2764
F7
F5
E5
E3
E1
F3
F1
2732 DXXX SPACE
G1
2732 EXXX SPACE
G3
2732 FXXX SPACE
G5
LA12
ADDRESS BUS A
DATA BUS A
ADDRESS BUS A
X, Y, Z
P BUS TO Audio
RESET
CE00 ~ CFFF
C600 ~ C7FF
C800 ~ C9FF
CA00 ~ CBFF
IOSPACE
HI-A
WCHD
MWEN
RESET
FIRQ
Blahking
MP access
TDISP
RDLine

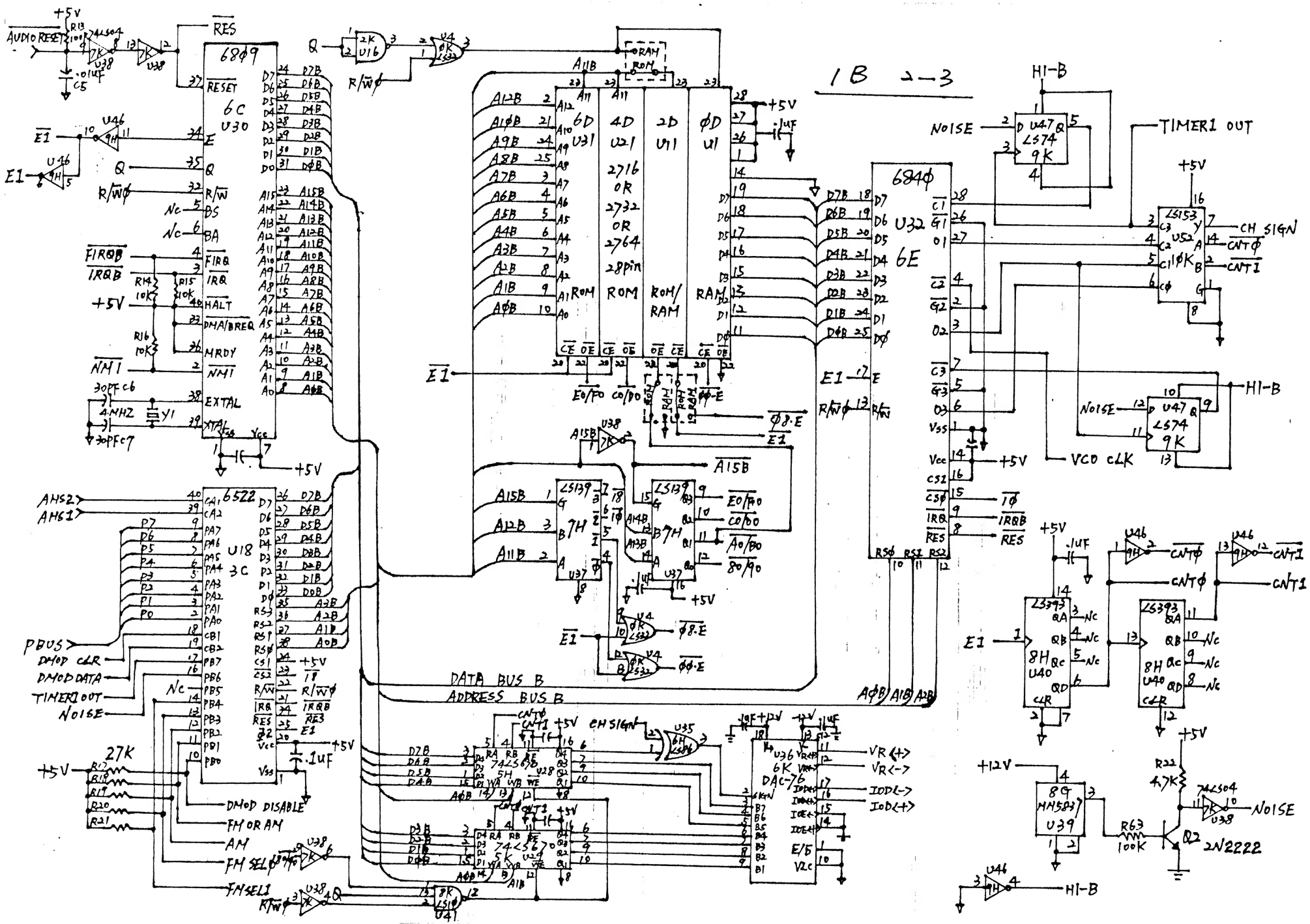

1B 2-3
AUDIO RESET
6809
6C
U30
6522
U18
3C
6840
U32
6E
6D
U31
4D
U21
2D
U11
0D
U1
2716
OR
2732
OR
2764
28pin
ROM
ROM/
RAM
RAM
LS139
7H
LS74
9K
LS153
U52
10K
LS393
8H
U40
MM5837
U39
74LS670
5H
74LS670
5K
DAC-76
6K
U36
2N2222
DATA BUS B
ADDRESS BUS B
TIMER1 OUT
VCO CLK
CH SIGN
NOISE
HI-B
PBUS
DMOD CLR
DMOD DATA
TIMER1 OUT
NOISE
DMOD DISABLE
FM OR AM
AM
FM SEL0
FM SEL1
AHS2
AHS1
27K
+5V
+12V

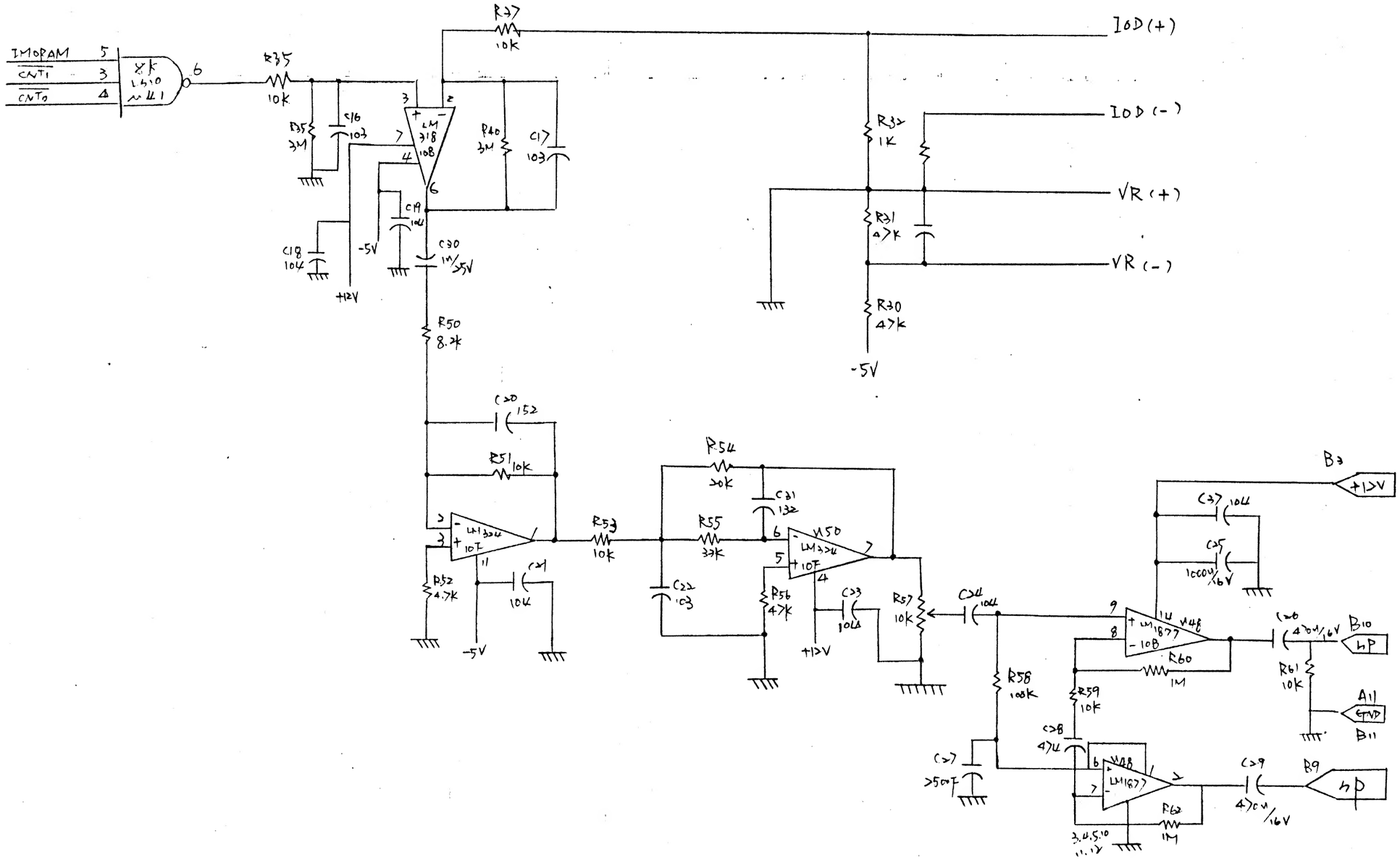
IMOPAM
CNT1
CNT0
R35
10k
R37
10k
IOD (+)
IOD (-)
VR (+)
VR (-)
R32
1K
R31
47K
R30
47K
-5V
LM 318
R40
3M
C17
103
C16
103
R35
3M
C18
104
C19
104
C30
1M/25V
+12V
R50
8.2k
C20
152
R51
10k
LM324
R52
4.7K
C21
104
R53
10k
R54
20k
C31
132
R55
33k
C22
103
R56
47K
C23
104
R57
10k
C24
104
R58
100K
C27
2500F
R59
10k
C28
474
R60
1M
R61
10k
C26
470M/16V
B10
hP
A11
GND
B11
C29
470M/16V
B9
hP
R62
1M
LM1877
B3
+12V
C37
104
C25
1000M/16V

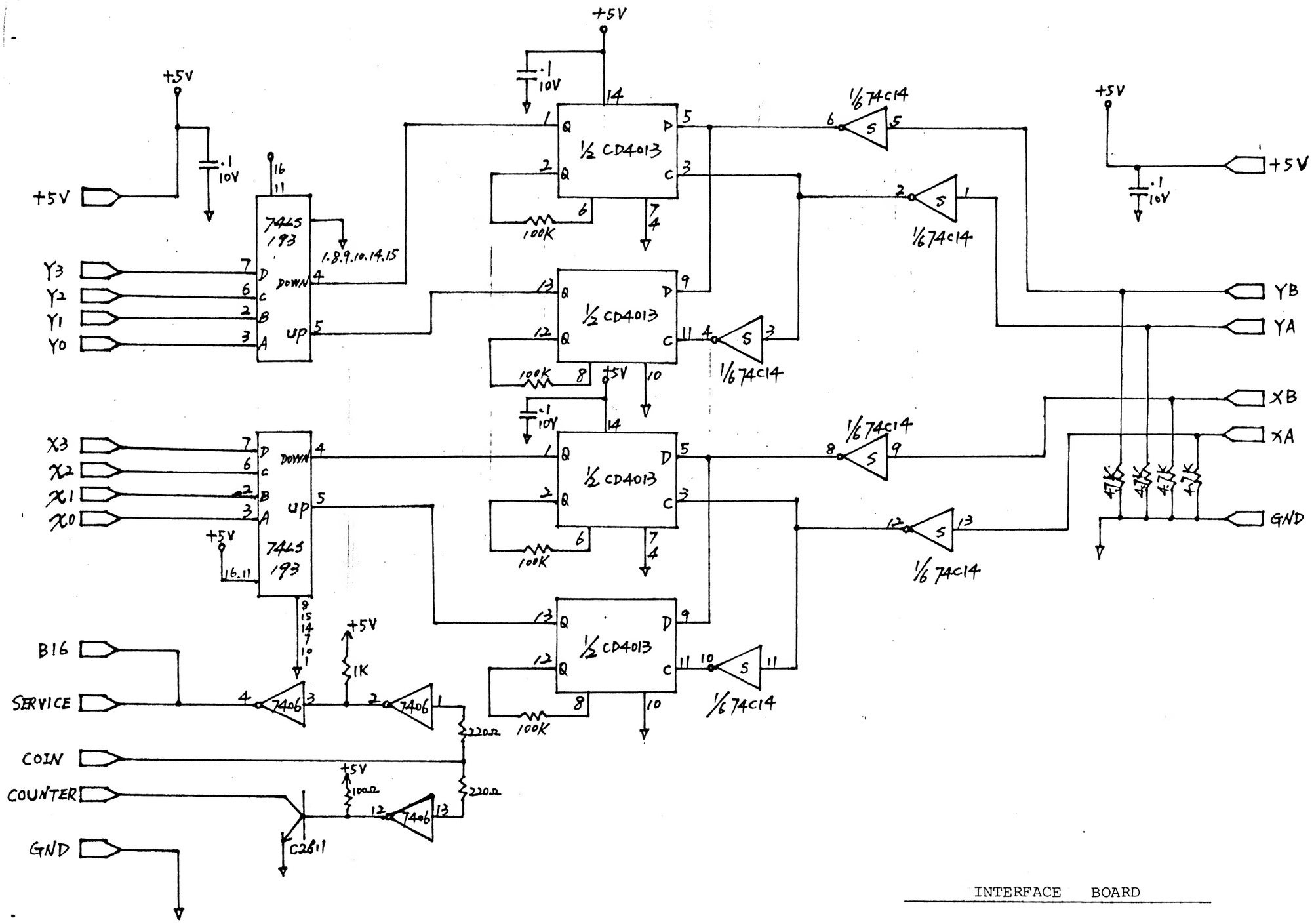

INTERFACE BOARD